MARBELLA

PRELIMINARY LAND DIVISION PLANS

IN A PORTION OF THE
NE 1/4 OF SECTION 34
T. 2 N., R 3 E., W.M
CLARK COUNTY, WASHINGTON

LEGEND

EXISTING	TOPOGRAPHIC FEATURES	PROPOSED
	5 FOOT INTERVAL CONTOUR	
	1 FOOT INTERVAL CONTOUR	
32"FIR	EVERGREEN TREE WITH DIAMETER AND TYPE	32"FIR
16"ALDER	DECIDUOUS TREE WITH DIAMETER AND TYPE	16"ALDER
	EDGE OF ASPHALT	
	EDGE OF CONCRETE	
	CURB	
	EDGE OF GRAVEL	
	PAINT STRIPE	
AL AL	ARCHAEOLOGY LIMITS	
O O	CHAINLINK FENCE LINE	O O
X X	FENCE LINE	X X
□ □	WOOD FENCE LINE	□ □
FO FO	FIBER OPTIC LOCATE	FO FO

EXISTING	PROPERTY FEATURES	PROPOSED
	PROPERTY BOUNDARY	
	RIGHT-OF-WAY	
	CENTERLINE	
	EASEMENT	

EXISTING	UTILITIES	PROPOSED
FO FO	FIBER OPTIC LOCATE	FO FO
G G G	GAS LOCATE	
SW SW	SIGNAL WIRE LOCATE	PWR
T T T	TELEPHONE LOCATE	COM
TV TV	TELEVISION LOCATE	TV TV
UG UG	MULTIPLE UTILITY LOCATE	UG UG
OHP	OVER HEAD POWER	OHW
E E E	ELECTRIC LOCATE	PWR
IRR	IRRIGATION	IRR
W W W	WATER	WAT
SS SS	SANITARY SEWER	SAN
SFM	SANITARY SEWER FORCE MAIN	SFM
ST ST	STORM DRAINAGE	STM
WV	WATER VALVE	
	FIRE HYDRANT	
WM	WATER METER	
CV	CONTROL VALVE	
	WATER STAND PIPE	
	WATER BLOW OFF ASSEMBLY	
TP	TELEPHONE PEDESTAL	
ST	STORM SEWER MANHOLE	ST
	CURB INLET	
	COMBINATION CURB INLET	
	CATCH BASIN	
	STORM FLOW DIRECTION	
CO	SANITARY CLEANOUT	CO
SS	SANITARY SEWER MANHOLE	SS
	POWER POLE	
	LIGHT POLE	
EV	ELECTRIC VAULT	EV
	ELECTRIC SERVICE BOX	
EM	ELECTRIC METER	EM
	SIGN	

SITE MAP
1" = 60'

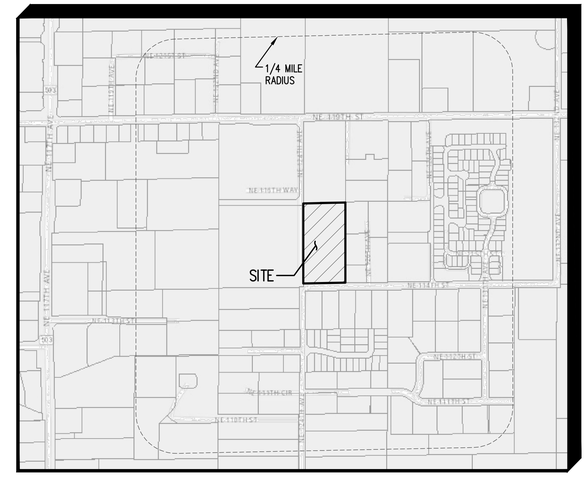

VICINITY MAP
NOT TO SCALE

APPLICANT/ CONTACT:

HARB ENGINEERING, INC.
CONTACT PERSON: GUS HARB, PE
701 COLUMBIA ST., SUITE 111
VANCOUVER, WA 98660
PHONE: (360) 695-6520
EMAIL: guss@harbengineering.com

OWNER:

SCOTT & CARLA BECKSTROM
12432 NE 114TH ST.
VANCOUVER, WA 98682

ENGINEERING FIRM:

HARB ENGINEERING, INC.
CONTACT PERSON: GUS HARB, PE
701 COLUMBIA ST., SUITE 111
VANCOUVER, WA 98660
PHONE: (360) 695-6520
EMAIL: guss@harbengineering.com

PARCEL INFORMATION:

PARCEL # 200196-000
PARCEL AREA: 5.00 ACRES (217,800 S.F.)
ZONED: R-30

SHEET INDEX:

PRLMN-00	COVER SHEET
PRLMN-01	EXISTING CONDITIONS PLAN
PRLMN-02	PRELIMINARY PLAT
PRLMN-03	PRELIMINARY SITE PLAN
PRLMN-04	PRELIMINARY SITE DETAILS
PRLMN-05	CIRCULATION PLAN
PRLMN-06	PRELIMINARY STORMWATER PLAN
PRLMN-07	PRELIMINARY STORMWATER DETAILS
PRLMN-08	PRELIMINARY LANDSCAPE PLAN

HARB ENGINEERING
LAND DEVELOPMENT PLANNING ENGINEERING
CONSTRUCTION MANAGEMENT
701 COLUMBIA STREET, SUITE 111 VANCOUVER, WA 98660
PHONE: (360) 695-6520 WWW.HARBENGINEERING.COM
HARB ENGINEERING, INC

GEORGE HARB REGISTERED PROFESSIONAL ENGINEER STATE OF WASHINGTON
EXPIRES JANUARY 1, 2016

MARBELLA

SHEET NAME:
COVER SHEET

DRAWN BY: B.S.G.
DESIGNED BY: B.S.G.
CHECKED BY: G.G.H.

SHEET #
PRLMN-00

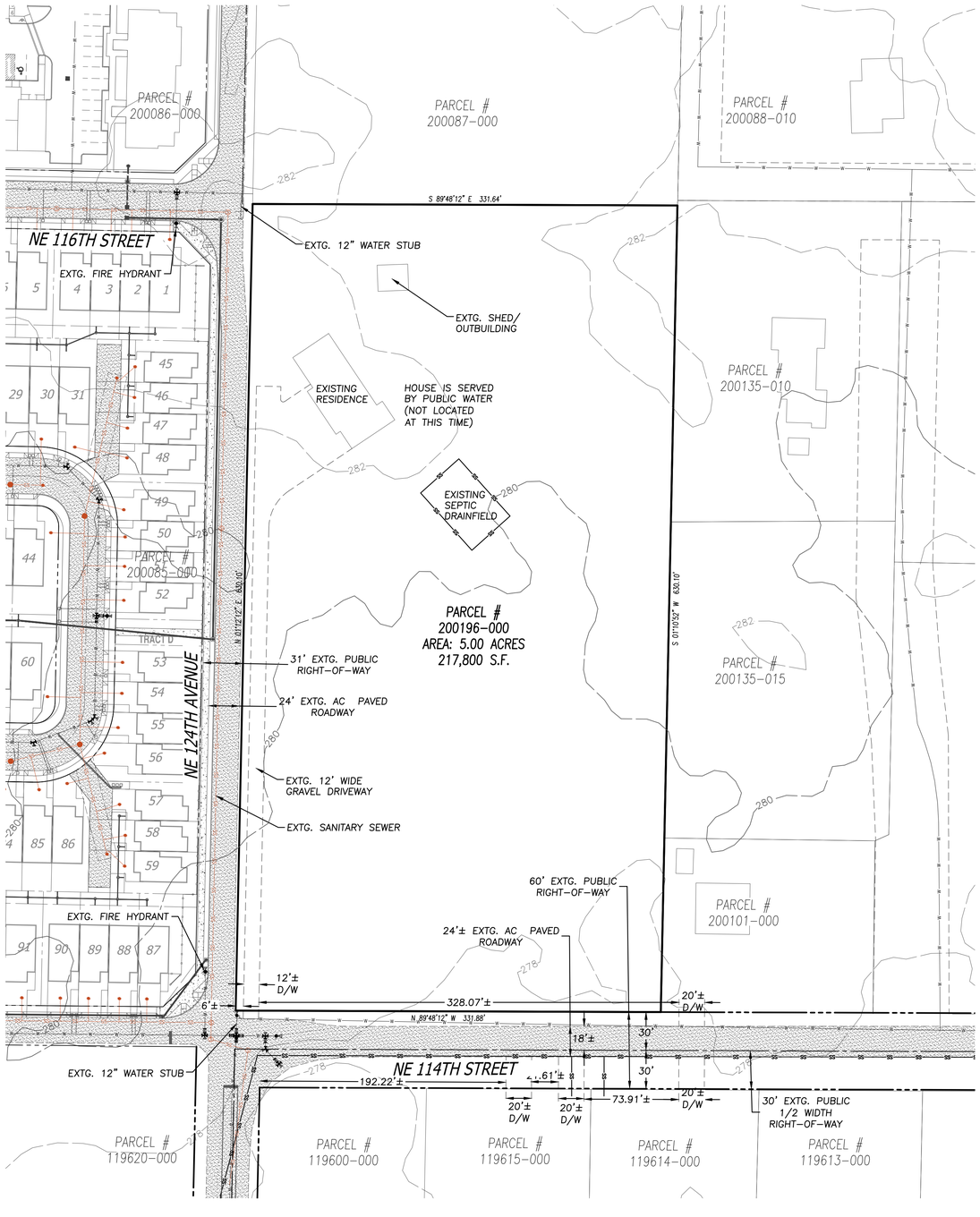

Property Information Fact Sheet

Mailing Information:
Account No.: 200196000
Owner: BECKSTROM SCOTT & BECKSTROM CARLA
Address: 12432 NE 114TH ST
C/S/Z: VANCOUVER, WA 98682
Assessed Parcel Size: 5.0 Ac
Property Type: SINGLE FAMILY RESIDENCE ON COMMERCIAL LAND

PARCEL LOCATION FINDINGS:

Quarter Section(s): NE 1/4,S34,T3N,R2E
Municipal Jurisdiction: Clark County
Urban Growth Area: Vancouver
Zoning: R-30
Zoning Overlay: No Mapping Indicators
Comprehensive Plan Designation: UH
Columbia River Gorge NSA: No Mapping Indicators
Building Moratorium: No Mapping Indicators

Late-Comer Area: No Mapping Indicators
Trans. Impact Fee Area: Orchards UH
Park Impact Fee District: 6
Neighborhood Association: Greater Brush Prairie
School District: Battle Ground
Elementary School: Glenwood Heights
Junior High School: Laurin
Senior High School: Prairie
Fire District: FD 3
Sewer District: Clark Regional
Water District: Clark Public Utilities
Wildland: No Mapping Indicators
Historic Sites: No Mapping Indicators

ENVIRONMENTAL CONSTRAINTS:

Soil Type(s): LeB, 100.0% of parcel
Hydric Soils: Non-Hydric, 100.0% of parcel
Flood Zone Designation: Outside Flood Area
CARA: Category 2 Recharge Areas
Liquefaction Susceptibility: Very Low
NEHRP: C
Slope: 0 - 5 percent, 100.0% of parcel
Landslide Hazards: No Mapping Indicators
Slope Stability: No Mapping Indicators
Priority Habitat and Species Areas: No Mapping Indicators
Priority Species Area Buffer: No Mapping Indicators
Priority Habitat Area Buffer: No Mapping Indicators
Archeological Predictive: High, 81.8% of parcel
Moderate-High, 18.2%
Archeological Site Buffers: No Mapping Indicators

ARCHEOLOGICAL PREDETERMINATION:

AN ARCHEOLOGICAL INVESTIGATION WAS CONDUCTED BY ARCHEOLOGICAL SERVICES, LLC. ON 8/15/2015 WITH THE RESULTS OF " NO HISTORIC OR PRE-CONTACT MATERIAL WAS IDENTIFIED DURING ANY PHASE OF THE PREDETERMINATION". SEE REPORT DATED 8/18/2015 INCLUDED IN SECTION 17 OF THE SUBMITTAL PACKAGE.

NOTE
This data is compiled from many sources and scales. Clark county makes this information available as a service, and accepts no responsibility for any inaccuracy, actual or implied.

DEVELOPERS GIS PACKET, Page 2 of 14
Printed: May 26, 2015

NOTES:

1. PARCEL # 200085-000 IS CURRENTLY UNDER-CONSTRUCTION FOR SINGLE FAMILY TOWN HOME UNITS.
2. TOPOGRAPHY SHOWN IS IN 2' CONTOURS FROM CLARK COUNTY GIS.
3. THERE ARE NO KNOWN WATER COURSES ON OR WITHIN 100' OF THE SITE.
4. THERE ARE NO KNOWN WATER BODIES, AREAS PRONE TO FLOODING OR WETLANDS ON OR WITHIN 100' OF THE SITE.
5. THERE ARE NO KNOWN FEMA DESIGNATED FLOOD PLAINS, FLOOD FRINGE, OR FLOODWAY ON OR WITHIN 100' OF THE SITE.
6. THERE ARE NO KNOWN DESIGNATED SHORELINES ON OR WITHIN 100' OF THE SITE.
7. WETLANDS DO NOT EXIST ON SITE THEREFORE A WETLAND DETERMINATION IS NOT REQUIRED.
8. THERE ARE NO KNOWN UNSTABLE SLOPES OR LANDSLIDE AREAS ON OR WITHIN 100' OF THE SITE.
9. THERE ARE NO KNOWN SIGNIFICANT WILDLIFE HABITAT OR VEGETATION ON OR WITHIN 100' OF THE SITE.
10. THERE ARE NO KNOW SIGNIFICANT HISTORIC SITES ON OR WITHIN 100' OF THE SITE.
11. THERE ARE NO EXISTING PEDESTRIAN FACILITIES LOCATED ON-SITE.
12. THERE IS A SIDEWALK ON THE WEST SIDE OF NE 124TH AVE THAT RUNS FROM NE 114TH STREET TO NE 119TH STREET.
13. THERE ARE NO EXISTING BICYCLE FACILITIES LOCATED ON OR WITHIN 100 FEET OF THE SITE.
14. ACCORDING TO C-TRAN, THERE ARE NO TRANSIT ROUTES WITHIN 600' OF THE SITE.
15. NE 124TH AVENUE, NE 116TH STREET AND NE 114TH STREETS ARE PUBLIC ASPHALT-CONCRETE PAVED ROADWAYS.
16. NO STREETS PROVIDING ACCESS TO THE SITE ARE IN EXCESS OF 15%.

OWNER:

SCOTT & CARLA BECKSTROM
12432 NE 114TH ST.
VANCOUVER, WA 98682

APPLICANT/ CONTACT:

HARB ENGINEERING, INC.
CONTACT PERSON: GUS HARB, PE
701 COLUMBIA ST., SUITE 111
VANCOUVER, WA 98660
PHONE: (360) 695-6520
EMAIL: guss@harbengineering.com

PARCEL INFORMATION:

PARCEL # 200196-000
PARCEL AREA: 5.00 ACRES (217,800S.F.)
ZONED: R-30

HARB ENGINEERING
LAND DEVELOPMENT CONSTRUCTION PLANNING MANAGEMENT ENGINEERING
701 COLUMBIA STREET, SUITE 111 VANCOUVER, WA 98660
PHONE: (360) 695-6520 WWW.HARBENGINEERING.COM
HARB ENGINEERING, INC

GEORGE H. HARB STATE OF WASHINGTON 22346 REGISTERED PROFESSIONAL ENGINEER
EXPIRES JANUARY 1, 2016

MARBELLA

SHEET NAME:
EXISTING CONDITIONS PLAN

DRAWN BY: B.S.G.
DESIGNED BY: B.S.G.
CHECKED BY: G.G.H.

SHEET #
PRLM-01

MARBELLA

PRELIMINARY PLAT

IN A PORTION OF THE
NE 1/4 OF SECTION 34
T. 2 N., R 3 E., W.M
CLARK COUNTY, WASHINGTON

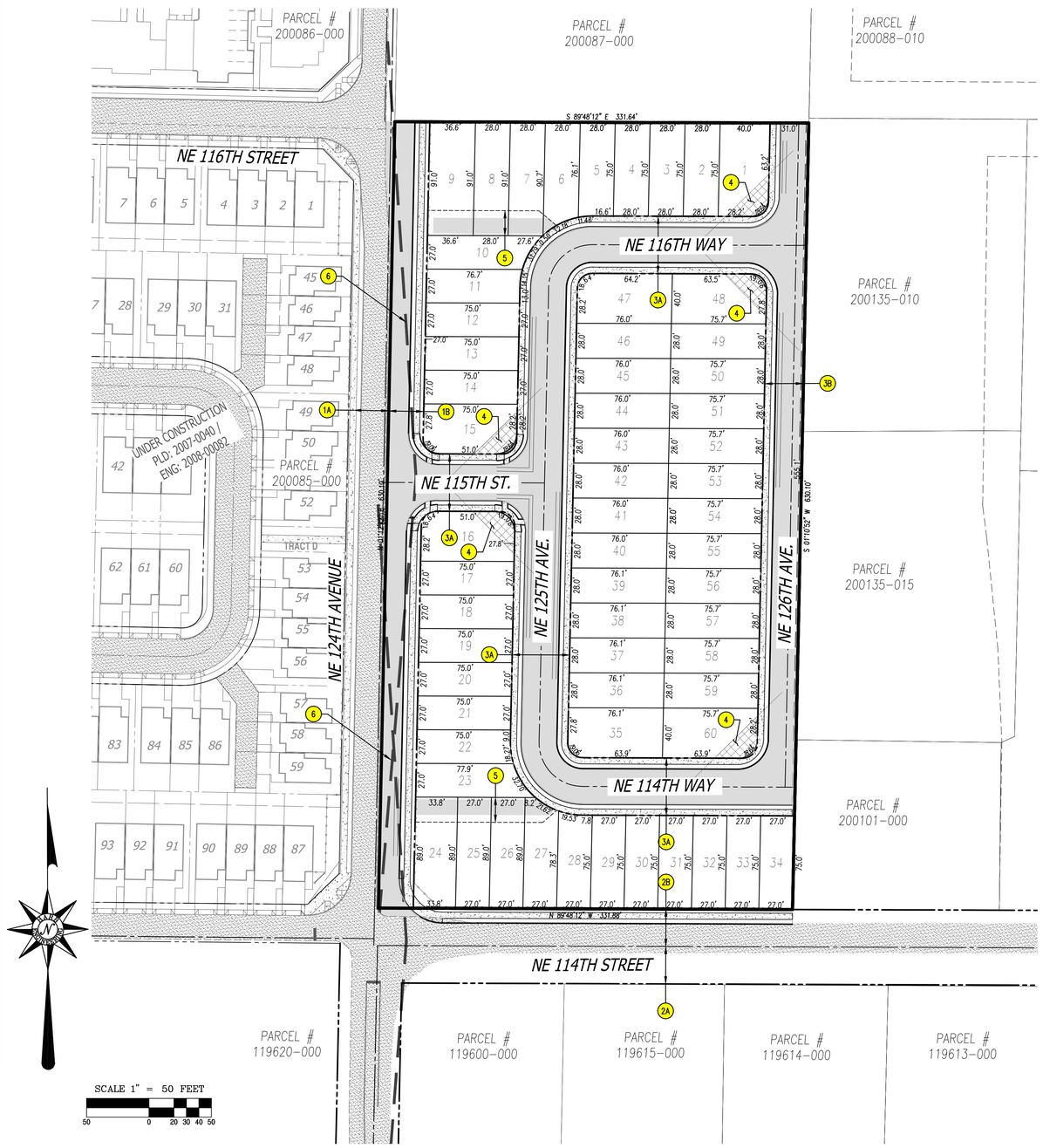

KEYED NOTES:

1A EXISTING 20' AC PAVED URBAN COLLECTOR (C-2) HALF-WIDTH ROADWAY WITHIN 32' RIGHT-OF-WAY PER CLARK COUNTY STD. DRAWING 6, SEE SHEET PRELMN-04.

1B PROPOSED 18' AC PAVED URBAN COLLECTOR (C-2) HALF-WIDTH ROADWAY WITHIN 28' RIGHT-OF-WAY PER CLARK COUNTY STD. DRAWING 6, SEE SHEET PRELMN-04.

2A EXISTING 5' AC PAVED NEIGHBORHOOD CIRCULATOR HALF-WIDTH ROADWAY WITHIN EXTG. 30' RIGHT-OF-WAY PER CLARK COUNTY STD. DRAWING 12, SEE SHEET PRELMN-04.

2B EXISTING 18' AC PAVED NEIGHBORHOOD CIRCULATOR HALF-WIDTH ROADWAY WITHIN EXTG. 30' RIGHT-OF-WAY PER CLARK COUNTY STD. DRAWING 12, SEE SHEET PRELMN-04. PROPOSED IMPROVEMENTS CONSIST OF CURB, GUTTER, LANDSCAPE STRIP AND DETACHED SIDEWALK.

3A PROPOSED 28' AC PAVED LOCAL RESIDENTIAL ROADWAY WITHIN 46' RIGHT-OF-WAY PER CLARK COUNTY STD. DRAWING 13, SEE SHEET PRELMN-04.

3B PROPOSED 20' AC PAVED LOCAL RESIDENTIAL HALF-WIDTH ROADWAY WITHIN 31' RIGHT-OF-WAY PER CLARK COUNTY STD. DRAWING 13, SEE SHEET PRELMN-04.

4 PROPOSED LOT SIGHT DISTANCE TRIANGLE PER CLARK COUNTY STD.

5 PROPOSED 20' ACCESS & UTILITY EASEMENT.

6 350' ROADWAY SIGHT DISTANCE TRIANGLE.

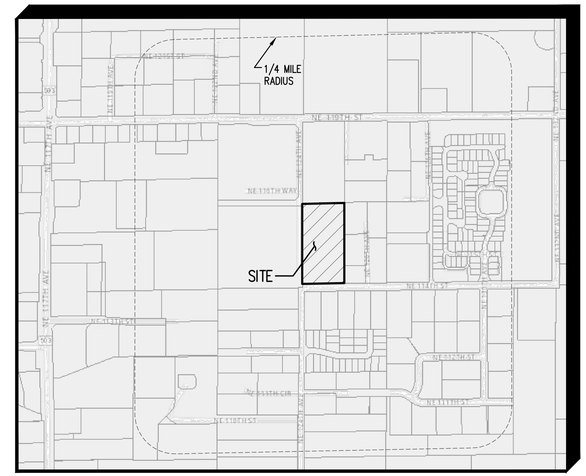

VICINITY MAP
NOT TO SCALE

SITE STATISTICS

	S.F.	ACRES
GROSS AREA	217,800	5.00
PROPOSED RIGHT-OF-WAY AREA	85,377	1.96
NET AREA FOR DENSITY CALCULATION	132,423	3.04

DENSITY CALCULATIONS (R-30 ZONE)

	# OF LOTS	NET AREA	DWELLING UNITS (DU)
MAXIMUM UNITS PER ACRE	30	3.04	91
MINIMUM UNITS PER ACRE	18	3.04	55
			DENSITY
PROPOSED NUMBER OF LOTS	60	3.04	19.7 DU/ACRE

NOTES:

1. SITE INFORMATION:
   PARCEL # 200196-000
   AREA: 5.0+/- ACRES (217,800 S.F.)
2. ALL EXISTING STRUCTURES SHALL BE DEMOLISHED AND REMOVED FROM THE SITE.
3. THE EXISTING SEPTIC SYSTEM WILL BE DECOMISSIONED PER WA. STATE DEPT. OF HEALTH REGULATIONS
4. NO STREETS PROVIDING ACCESS TO THE SITE ARE IN EXCESS OF 15%.
5. ALL PROPOSED DRIVEWAYS SIGHT DISTANCE STANDARDS CAN BE MET.
6. ALL SIGHT DISTANCE TRIANGLES FOR PUBLIC ROADWAYS CAN BE MET.

PARCEL AREA TABLE

PARCEL #	AREA (SF)	PARCEL #	AREA (SF)	PARCEL #	AREA (SF)
1	2,971	21	2,025	41	2,129
2	2,100	22	2,042	42	2,129
3	2,100	23	2,298	43	2,128
4	2,100	24	3,010	44	2,128
5	2,105	25	2,403	45	2,128
6	2,288	26	2,403	46	2,128
7	2,548	27	2,288	47	3,009
8	2,548	28	2,046	48	2,996
9	3,332	29	2,025	49	2,120
10	2,236	30	2,025	50	2,119
11	2,033	31	2,025	51	2,119
12	2,025	32	2,025	52	2,119
13	2,025	33	2,025	53	2,119
14	2,025	34	2,026	54	2,119
15	2,939	35	3,012	55	2,119
16	2,939	36	2,131	56	2,119
17	2,025	37	2,130	57	2,119
18	2,025	38	2,130	58	2,119
19	2,025	39	2,130	59	2,119
20	2,025	40	2,129	60	2,998

APPLICANT/ CONTACT:

HARB ENGINEERING, INC.
CONTACT PERSON: GUS HARB, PE
701 COLUMBIA ST., SUITE 111
VANCOUVER, WA 98660
PHONE: (360) 695-6520
EMAIL: guss@harbengineering.com

OWNER:

SCOTT & CARLA BECKSTROM
12432 NE 114TH ST.
VANCOUVER, WA 98682

ENGINEERING FIRM:

HARB ENGINEERING, INC.
CONTACT PERSON: GUS HARB, PE
701 COLUMBIA ST., SUITE 111
VANCOUVER, WA 98660
PHONE: (360) 695-6520
EMAIL: guss@harbengineering.com

PARCEL INFORMATION:

PARCEL # 200196-000
PARCEL AREA: 5.00 ACRES (217,800 S.F.)
ZONED: R-30

HARB ENGINEERING
LAND DEVELOPMENT CONSTRUCTION PLANNING MANAGEMENT ENGINEERING
701 COLUMBIA STREET, SUITE 111 VANCOUVER, WA 98660
PHONE: (360) 695-6520 WWW.HARBENGINEERING.COM
HARB ENGINEERING, INC
GEORGE H. HARB III
STATE OF WASHINGTON
CHARTERED PROFESSIONAL ENGINEER
EXPIRES JANUARY 1, 2016

MARBELLA

SHEET NAME:
PRELIMINARY PLAT

DRAWN BY: B.S.G.
DESIGNED BY: B.S.G.
CHECKED BY: G.G.H.

SHEET #
PRLMN-02

MARBELLA

PRELIMINARY SITE PLAN

IN A PORTION OF THE
NE 1/4 OF SECTION 34
T. 2 N., R 3 E., W.M
CLARK COUNTY, WASHINGTON

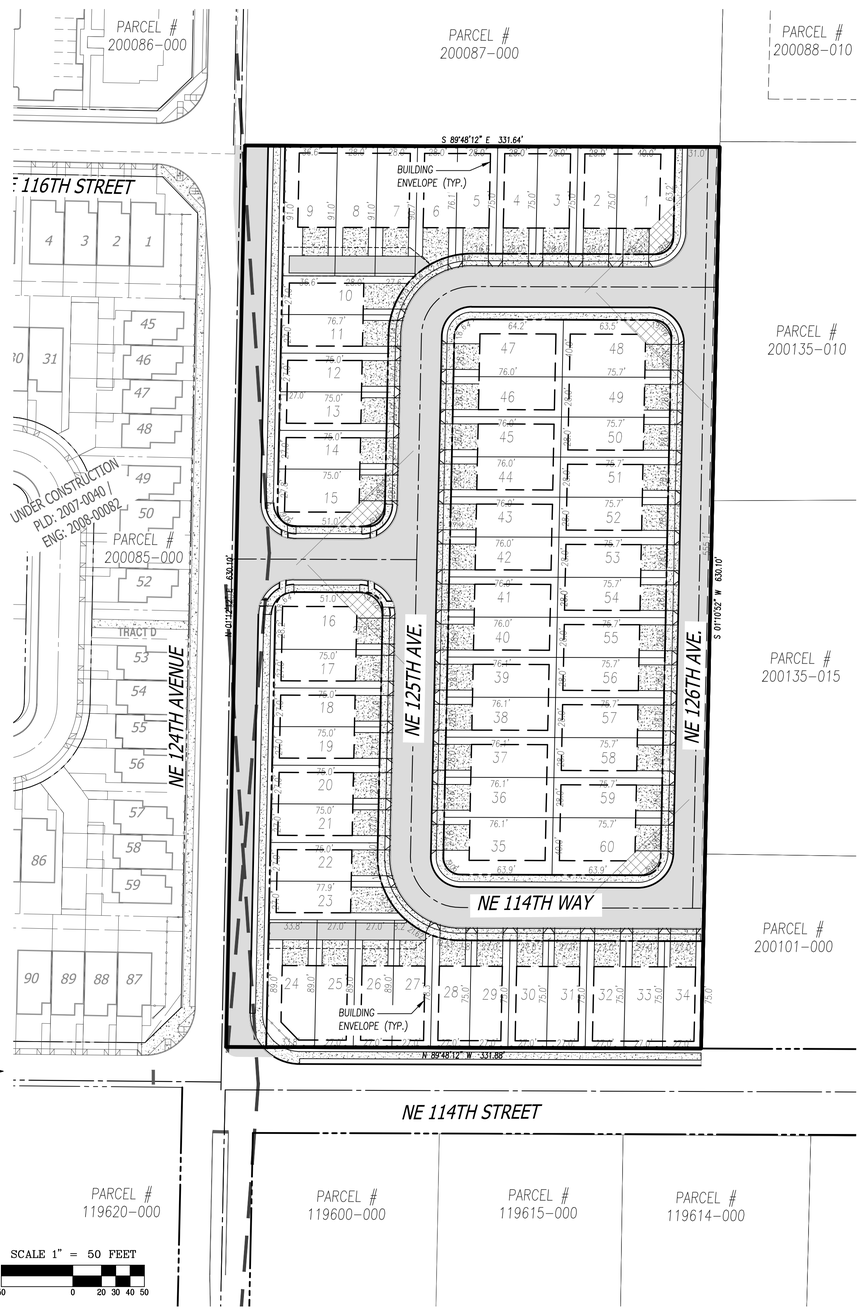

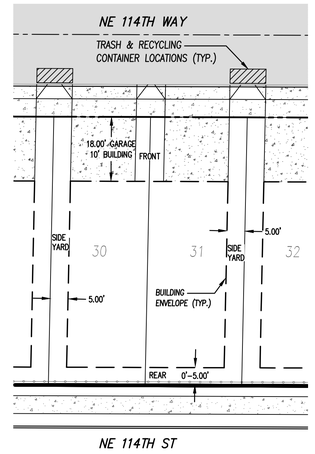

BUILDING SETBACKS (TYP.)
SCALE: 1"=20'

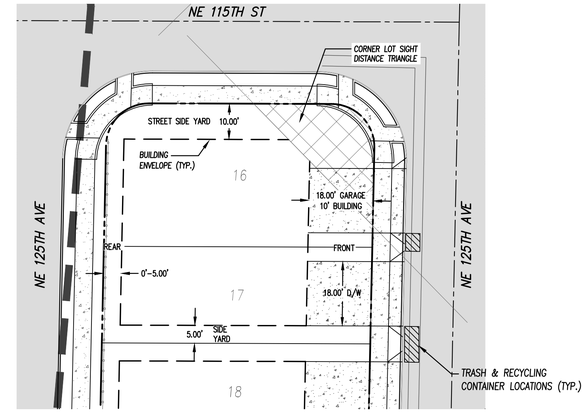

BUILDING SETBACKS (TYP.)
SCALE: 1"=20'

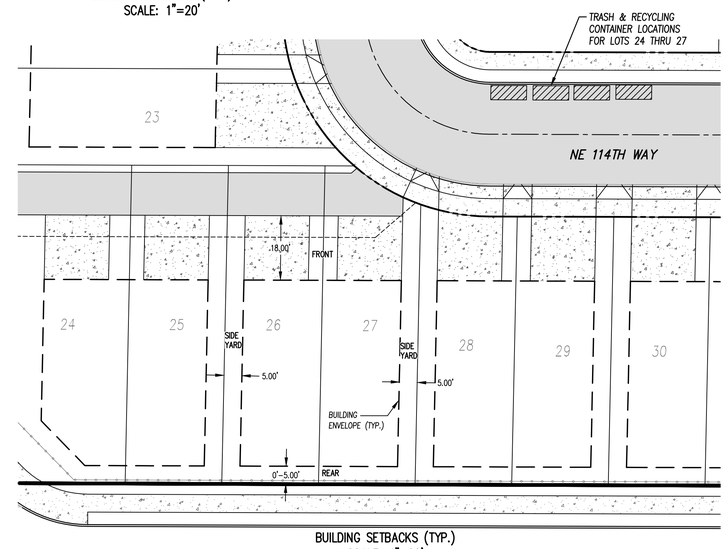

BUILDING SETBACKS (TYP.)
SCALE: 1"=20'

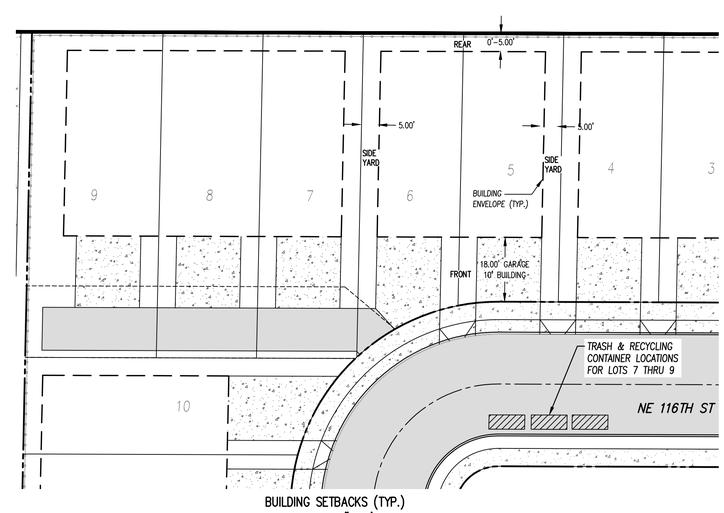

BUILDING SETBACKS (TYP.)
SCALE: 1"=20'

BUILDING SETBACKS:

FRONT – 10' (18' TO GARAGE)

SIDE YARD – 0' OR 5'

STREET SIDE YARD – 10'

REAR – 0' OR 5'

MAXIMUM LOT COVERAGE – 75%

NOTES:

1. EACH LOT PROVIDES A TOTAL OF 3 PARKING STALLS. 2 SPACES WITHIN CONCRETE DRIVEWAY AREA AND A MINIMUM OF 1 PARKING SPACE WITHIN THE GARAGE AREA OF THE TOWNHOME.

APPLICANT/ CONTACT:

HARB ENGINEERING, INC.
CONTACT PERSON: GUS HARB, PE
701 COLUMBIA ST., SUITE 111
VANCOUVER, WA 98660
PHONE: (360) 695-6520
EMAIL: guss@harbengineering.com

OWNER:

SCOTT & CARLA BECKSTROM
12432 NE 114TH ST.
VANCOUVER, WA 98682

ENGINEERING FIRM:

HARB ENGINEERING, INC.
CONTACT PERSON: GUS HARB, PE
701 COLUMBIA ST., SUITE 111
VANCOUVER, WA 98660
PHONE: (360) 695-6520
EMAIL: guss@harbengineering.com

PARCEL INFORMATION:

PARCEL # 200196-000
PARCEL AREA: 5.00 ACRES (217,800 S.F.)
ZONED: R-30

HARB ENGINEERING
LAND DEVELOPMENT PLANNING ENGINEERING
CONSTRUCTION MANAGEMENT
701 COLUMBIA STREET, SUITE 111 VANCOUVER, WA 98660
PHONE: (360) 695-6520 WWW.HARBENGINEERING.COM
HARB ENGINEERING, INC

GUS G. HARB, STATE OF WASHINGTON, REGISTERED PROFESSIONAL ENGINEER, CERTIFICATE NUMBER 38304
EXPIRES JANUARY 1, 2016

MARBELLA

SHEET NAME:
PRELIMINARY SITE PLAN

DRAWN BY: B.S.G.
DESIGNED BY: B.S.G.
CHECKED BY: G.G.H.

SHEET #
PRLMN-03

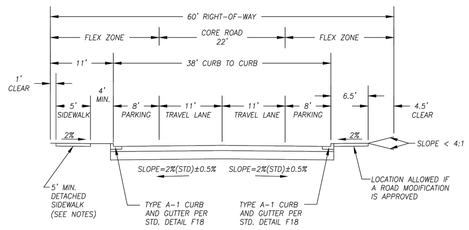

CONVENTIONAL CONSTRUCTION		
AASHTO SOIL TYPE	ASPHALT THICKNESS	BASE ROCK THICKNESS
A-1	0.45'	0.45'
A-2	0.45'	0.45'
A-3	0.45'	0.55'
A-4	0.45'	0.85'
A-5	0.45'	1.15'
A-6	0.45'	1.55'
A-7	0.50'	2.00'
OTHER	NO SECTION	ESTIMATED

THICK ASPHALT CONSTRUCTION		
AASHTO SOIL TYPE	ASPHALT THICKNESS	BASE ROCK THICKNESS
A-1	0.52'	0.25'
A-2	0.52'	0.25'
A-3	0.55'	0.25'
A-4	0.62'	0.25'
A-5	0.72'	0.25'
A-6	0.82'	0.25'
A-7	1.00'	0.25'
OTHER	NO SECTION	ESTIMATED

NOTES:

1. SIDEWALK SHALL BE DETACHED. MAKE IT MEANDERING IF POSSIBLE.
2. SIDEWALKS MAY BE ALLOWED WITHIN EASEMENTS ONLY WHERE IT IS DEMONSTRATED THAT SUCH SIDEWALKS CAN NOT BE LOCATED WITHIN THE ESTABLISHED PUBLIC RIGHT-OF-WAY OR PRIVATE ROADWAY TRACT DUE TO NATURAL FEATURES (E.G., SIGNIFICANT TREES, ROCK OUTCROPPINGS, STEEP TOPOGRAPHY, ETC.) THAT SHOULD BE PRESERVED, OR IRREGULAR LOT CONFIGURATION.
3. WIDER SIDEWALKS MAY BE REQUIRED BY REVIEWING AUTHORITY UNDER CERTAIN CIRCUMSTANCES.
4. ALTERNATE BIKE LANE SECTION USED WHEN A BIKEWAY IS SHOWN ON THE CLARK COUNTY TRAILS & BIKEWAYS SYSTEM MAP.
5. SUBGRADE REINFORCEMENT GEOTEXTILES SHALL BE INSTALLED OVER ALL A-6, A-7 SOILS PRIOR TO CONSTRUCTING THE BASE AND SURFACING.
6. THE PAVEMENT STRUCTURE THICKNESSES IDENTIFIED FOR THESE SOIL TYPES ARE REQUIRED UNLESS A SITE SPECIFIC PAVEMENT DESIGN IS DONE. THE TOTAL PAVEMENT STRUCTURE SHALL NOT EXCEED 2.5 FEET.
7. ASPHALT CONCRETE FOR ALL COLLECTORS SHALL BE WSDOT HMA CL $\frac{1}{2}$" PG 64-22 OR EQUIVALENT.
8. EITHER CONVENTIONAL OR THICK ASPHALT CONSTRUCTION IS ALLOWED.
9. ROADWAY SLOPE OUTSIDE LISTED RANGE ALLOWED WITH APPROVAL FOR FRONTAGE/MATCHING SITUATIONS.
10. THE SUBGRADE AND CRUSHED SURFACING MATERIALS SHALL BE COMPACTED PER WSDOT STANDARDS.
11. FEATURES WITHIN CORE ROAD AND FLEX ZONE ARE SUBJECT TO CCC 40.350.030(B)(3) AND TABLE CCC 40.350.030-2.
12. STORMWATER LOW IMPACT DEVELOPMENT (LID) FEATURES IN THE RIGHT-OF-WAY ARE SUBJECT TO CCC 40.350.030(B)(3) AND TABLE CCC 40.350.030-2.

Department of Public Works
CLARK COUNTY
WASHINGTON
proud past, promising future

URBAN COLLECTOR (C-2)
2-LANE

APPROVED
COUNTY ENGINEER
09/18/13
DATE

DRAWING 6
DESIGNED
DRAWN
DATE 09/18/13

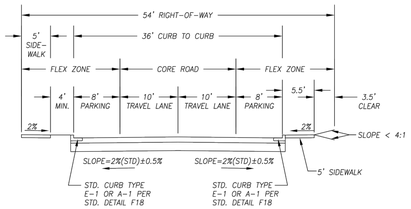

CONVENTIONAL CONSTRUCTION		
AASHTO SOIL TYPE	ASPHALT THICKNESS	BASE ROCK THICKNESS (NOTE 5)
A-1	0.35'	0.50'
A-2	0.35'	0.50'
A-3	0.35'	0.50'
A-4	0.35'	0.60'
A-5	0.35'	0.90'
A-6	0.35'	1.20'
A-7	0.40'	1.60'
OTHER	NO SECTION	ESTIMATED

THICK ASPHALT CONSTRUCTION		
AASHTO SOIL TYPE	ASPHALT THICKNESS	BASE ROCK THICKNESS (NOTE 5)
A-1	0.42'	0.25'
A-2	0.42'	0.25'
A-3	0.42'	0.25'
A-4	0.45'	0.25'
A-5	0.55'	0.25'
A-6	0.62'	0.25'
A-7	0.80'	0.25'
OTHER	NO SECTION	ESTIMATED

NOTES:

1. SIDEWALK MAY BE DETACHED.
2. SIDEWALKS MAY BE ALLOWED WITHIN EASEMENTS ONLY WHERE IT IS DEMONSTRATED THAT SUCH SIDEWALKS CAN NOT BE LOCATED WITHIN THE ESTABLISHED PUBLIC RIGHT-OF-WAY OR PRIVATE ROADWAY TRACT DUE TO NATURAL FEATURES (E.G., SIGNIFICANT TREES, ROCK OUTCROPPINGS, STEEP TOPOGRAPHY, ETC.) THAT SHOULD BE PRESERVED, OR IRREGULAR LOT CONFIGURATION.
3. WIDER SIDEWALKS MAY BE REQUIRED BY REVIEWING AUTHORITY UNDER CERTAIN CIRCUMSTANCES.
4. NEIGHBORHOOD CIRCULATOR MAY INCLUDE 6' BIKE LANE IN LIEU OF PARKING.
5. SUBGRADE REINFORCEMENT GEOTEXTILE SHALL BE INSTALLED OVER ALL A-6 AND A-7 SOIL PRIOR TO CONSTRUCTING THE BASE. SUBGRADE REINFORCEMENT GEOTEXTILE SHALL ALSO BE INSTALLED OVER A-4 AND A-5 SOIL PRIOR TO CONSTRUCTING THE BASE WHEN THE BASE THICKNESS IS LESS THAN 0.75 FT
6. THE PAVEMENT STRUCTURE THICKNESSES IDENTIFIED FOR THESE SOIL TYPES ARE REQUIRED UNLESS A SITE SPECIFIC PAVEMENT DESIGN IS DONE. THE TOTAL PAVEMENT STRUCTURE SHALL NOT EXCEED 2.5 FEET.
7. ASPHALT CONCRETE FOR ALL CIRCULARTORS SHALL BE WSDOT HMA CL $\frac{1}{2}$" PG 64-22 OR EQUIVALENT.
8. EITHER CONVENTIONAL OR THICK ASPHALT CONSTRUCTION IS ALLOWED.
9. ROADWAY SLOPE OUTSIDE LISTED RANGE ALLOWED WITH APPROVAL FOR FRONTAGE/MATCHING SITUATIONS.
10. THE SUBGRADE AND CRUSHED SURFACING MATERIALS SHALL BE COMPACTED PER WSDOT STANDARDS.
11. FEATURES WITHIN CORE ROAD AND FLEX ZONE ARE SUBJECT TO CCC 40.350.030(B)(3) AND TABLE CCC 40.350.030-2.
12. STORMWATER LOW IMPACT DEVELOPMENT (LID) FEATURES IN THE RIGHT-OF-WAY ARE SUBJECT TO CCC 40.350.030(B)(3) AND TABLE CCC 40.350.030-2.

Department of Public Works
CLARK COUNTY
WASHINGTON
proud past, promising future

URBAN NEIGHBORHOOD CIRCULATOR

APPROVED
COUNTY ENGINEER
09/18/13
DATE

DRAWING 12
DESIGNED
DRAWN
DATE 09/18/13

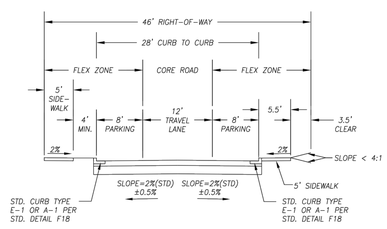

CONVENTIONAL CONSTRUCTION		
AASHTO SOIL TYPE	ASPHALT THICKNESS	BASE ROCK THICKNESS (NOTE 4)
A-1	0.35'	0.50'
A-2	0.35'	0.50'
A-3	0.35'	0.50'
A-4	0.35'	0.60'
A-5	0.35'	0.90'
A-6	0.35'	1.20'
A-7	0.40'	1.60'
OTHER	NO SECTION	ESTIMATED

THICK ASPHALT CONSTRUCTION		
AASHTO SOIL TYPE	ASPHALT THICKNESS	BASE ROCK THICKNESS (NOTE 4)
A-1	0.42'	0.25'
A-2	0.42'	0.25'
A-3	0.42'	0.25'
A-4	0.45'	0.25'
A-5	0.55'	0.25'
A-6	0.62'	0.25'
A-7	0.80'	0.25'
OTHER	NO SECTION	ESTIMATED

NOTES:

1. SIDEWALK MAY BE DETACHED.
2. SIDEWALKS MAY BE ALLOWED WITHIN EASEMENTS ONLY WHERE IT IS DEMONSTRATED THAT SUCH SIDEWALKS CAN NOT BE LOCATED WITHIN THE ESTABLISHED PUBLIC RIGHT-OF-WAY OR PRIVATE ROADWAY TRACT DUE TO NATURAL FEATURES (E.G., SIGNIFICANT TREES, ROCK OUTCROPPINGS, STEEP TOPOGRAPHY, ETC.) THAT SHOULD BE PRESERVED, OR IRREGULAR LOT CONFIGURATION.
3. WIDER SIDEWALKS MAY BE REQUIRED BY REVIEWING AUTHORITY UNDER CERTAIN CIRCUMSTANCES.
4. SUBGRADE REINFORCEMENT GEOTEXTILE SHALL BE INSTALLED OVER ALL A-6 AND A-7 SOIL PRIOR TO CONSTRUCTING THE BASE. SUBGRADE REINFORCEMENT GEOTEXTILE SHALL ALSO BE INSTALLED OVER A-4 AND A-5 SOIL PRIOR TO CONSTRUCTING THE BASE WHEN THE BASE THICKNESS IS LESS THAN 0.75 FT.
5. THE PAVEMENT STRUCTURE THICKNESSES IDENTIFIED FOR THESE SOIL TYPES ARE REQUIRED UNLESS A SITE SPECIFIC PAVEMENT DESIGN IS DONE. THE TOTAL PAVEMENT STRUCTURE SHALL NOT EXCEED 2.5 FEET.
6. ASPHALT CONCRETE FOR ALL RESIDENTIAL ACCESS SHALL BE WSDOT HMA CL $\frac{1}{2}$" PG 64-22 OR EQUIVALENT.
7. EITHER CONVENTIONAL OR THICK ASPHALT CONSTRUCTION IS ALLOWED.
8. ROADWAY SLOPE OUTSIDE LISTED RANGE ALLOWED WITH APPROVAL FOR FRONTAGE/MATCHING SITUATIONS.
9. THE SUBGRADE AND CRUSHED SURFACING MATERIALS SHALL BE COMPACTED PER WSDOT STANDARDS.
10. FEATURES WITHIN CORE ROAD AND FLEX ZONE ARE SUBJECT TO CCC 40.350.030(B)(3) AND TABLE CCC 40.350.030-2.
11. STORMWATER LOW IMPACT DEVELOPMENT (LID) FEATURES IN THE RIGHT-OF-WAY ARE SUBJECT TO CCC 40.350.030(B)(3) AND TABLE CCC 40.350.030-2.

Department of Public Works
CLARK COUNTY
WASHINGTON
proud past, promising future

URBAN LOCAL RESIDENTIAL ACCESS

APPROVED
COUNTY ENGINEER
09/18/13
DATE

DRAWING 13
DESIGNED
DRAWN
DATE 09/18/13

HARB ENGINEERING
LAND DEVELOPMENT CONSTRUCTION
PLANNING MANAGEMENT
ENGINEERING
701 COLUMBIA STREET, SUITE 111 VANCOUVER, WA 98660
PHONE: (360) 695-6520 WWW.HARBENGINEERING.COM
HARB ENGINEERING, INC

GEORGE G. HARB STATE OF WASHINGTON 22304 REGISTERED PROFESSIONAL ENGINEER
EXPIRES JANUARY 1, 2016

MARBELLA

SHEET NAME:

PRELIMINARY SITE DETAILS

DRAWN BY: B.S.G.

DESIGNED BY: B.S.G.

CHECKED BY: G.G.H.

SHEET #

PRLMN-04

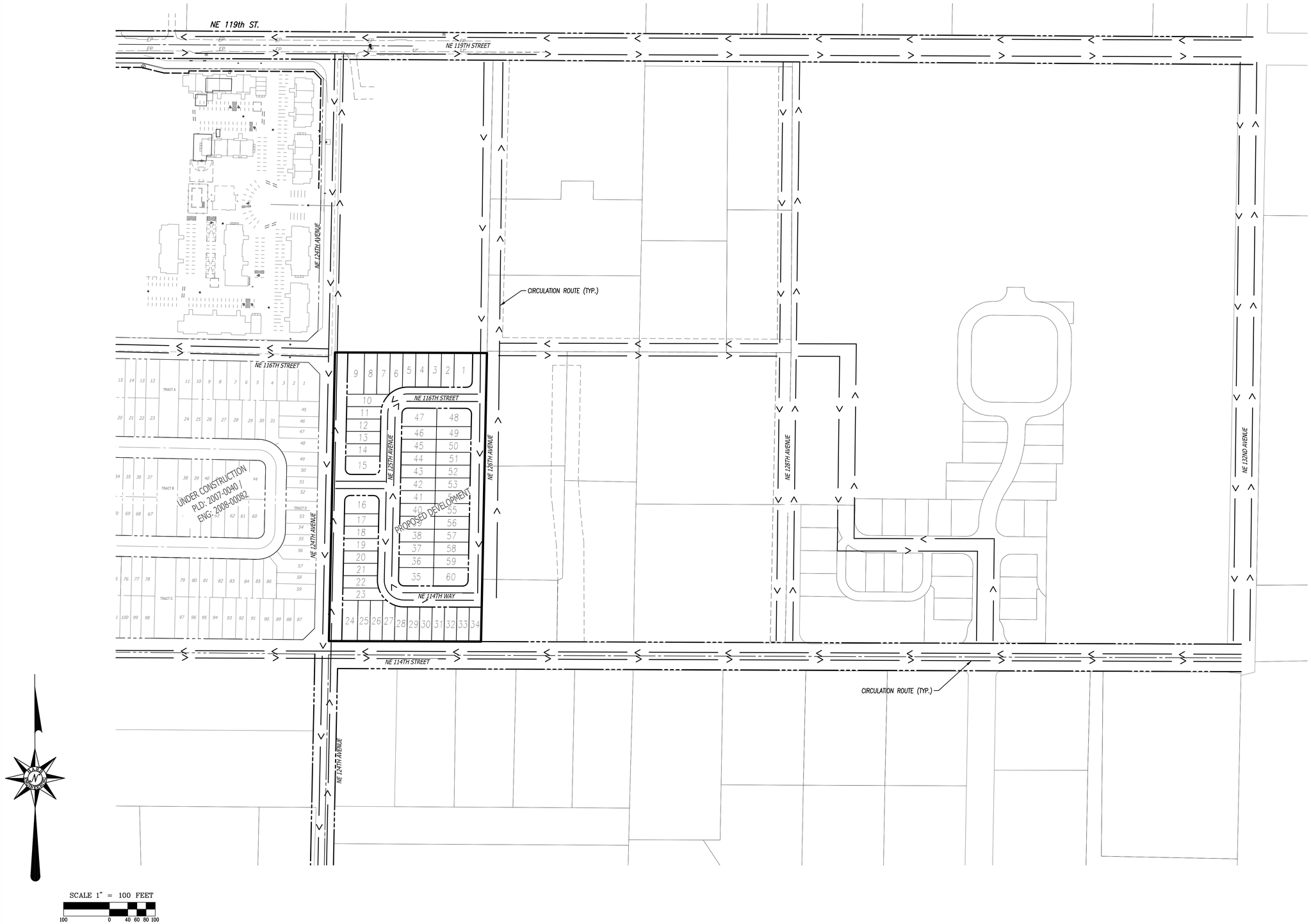

HARB ENGINEERING

LAND DEVELOPMENT PLANNING ENGINEERING
CONSTRUCTION MANAGEMENT

701 COLUMBIA STREET, SUITE 111 VANCOUVER, WA 98660
PHONE: (360) 695-6520 WWW.HARBENGINEERING.COM

HARB ENGINEERING, INC

GEORGE HARB
STATE OF WASHINGTON
CHARTERED STRUCTURAL ENGINEER
EXPIRES JANUARY 1, 2016

MARBELLA

SHEET NAME:

CIRCULATION PLAN

DRAWN BY: B.S.G.

DESIGNED BY: B.S.G.

CHECKED BY: G.G.H.

SHEET #

PRLMN-05

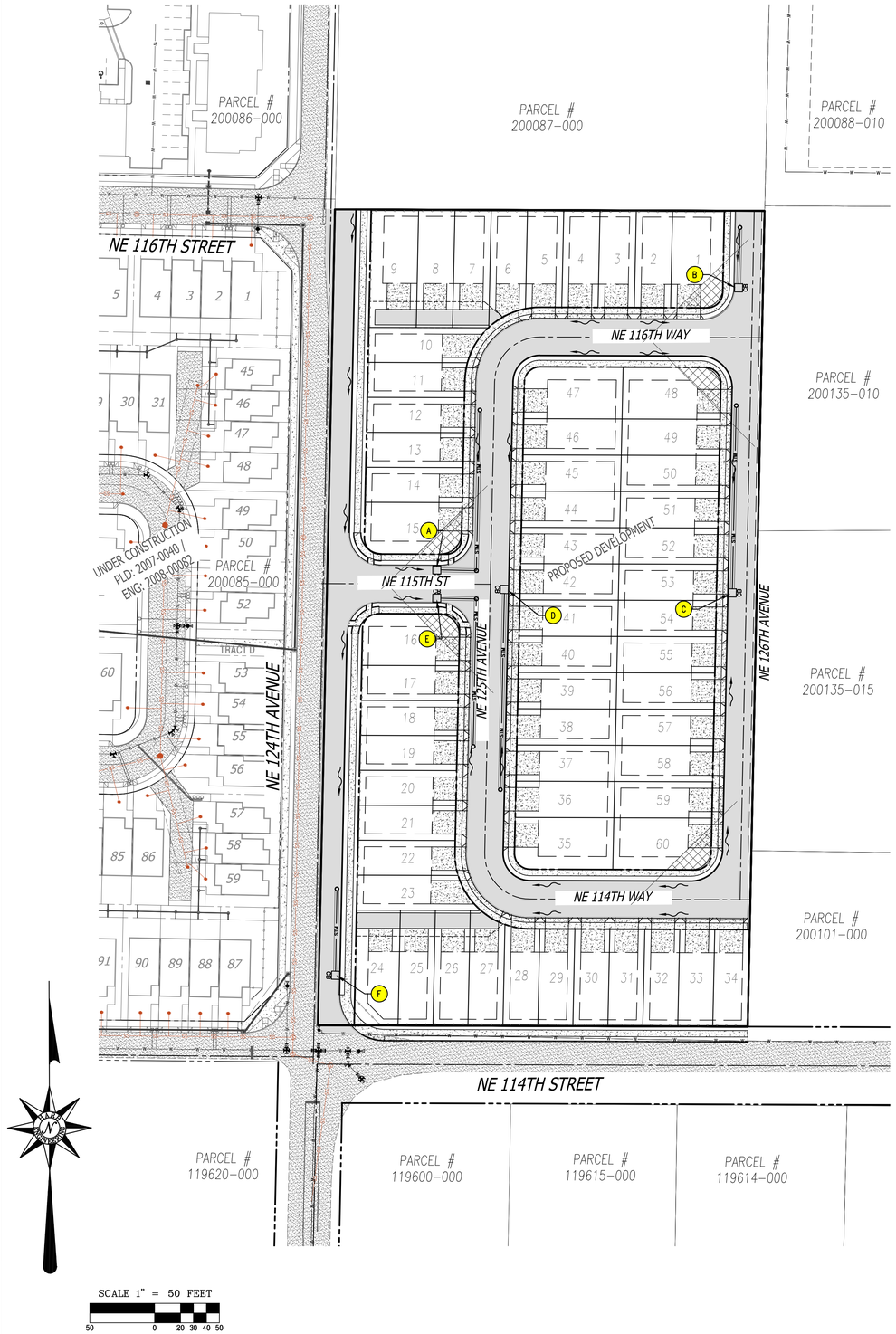

KEYED NOTES:

- (A) PROPOSED CONTECH STORMWATER MANAGEMENT CB FILTER W/ 3 CARTRIDGES AND 150LF OF INFILTRATION TRENCH.
- (B) PROPOSED CONTECH STORMWATER MANAGEMENT CB FILTER W/ 1 CARTRIDGES AND 42LF OF INFILTRATION TRENCH.
- (C) PROPOSED CONTECH STORMWATER MANAGEMENT CB FILTER W/ 3 CARTRIDGES AND 140LF OF INFILTRATION TRENCH.
- (D) PROPOSED CONTECH STORMWATER MANAGEMENT CB FILTER W/ 3 CARTRIDGES AND 150LF OF INFILTRATION TRENCH.
- (E) PROPOSED CONTECH STORMWATER MANAGEMENT CB FILTER W/ 3 CARTRIDGES AND 140LF OF INFILTRATION TRENCH.
- (F) PROPOSED CONTECH STORMWATER MANAGEMENT CB FILTER W/ 2 CARTRIDGES AND 62LF OF INFILTRATION TRENCH.

NOTES:

1. THE STORMWATER WILL BE COLLECTED, TREATED BY STORMWATER CATCH BASIN FILTERS AND INFILTRATED ONSITE. SEE SHEET PRLMN-07 FOR CONTECH STORMWATER MANAGEMENT FILTER DETAILS.
2. EACH INDIVIDUAL LOT WILL HAVE ITS OWN INFILTRATION SYSTEM FOR ROOF DRAINAGE, CRAWL SPACE DRAINS AND LANDSCAPE RUNOFF. SEE TYPICAL LOT DRAINAGE PLAN ON THIS SHEET.
3. INFILTRATION RATES EXCEED 100 IN/HR ON THE NEIGHBORING SITE TO THE WEST. SEE INFILTRATION REPORT BY COLUMBIA WEST ENGINEERING, INC. DATED APRIL, 5TH, 2007 IN SECTION 11 OF THIS SUBMITTAL PACKAGE.
4. INFILTRATION TESTING SPECIFIC TO THIS SITE WILL BE CONDUCTED PRIOR TO FINAL ENGINEERING DESIGN.

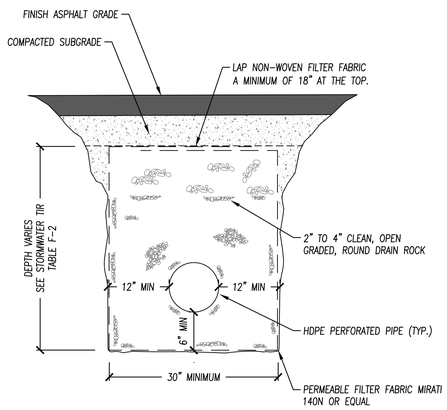

INFILTRATION TRENCH WITHIN ROADWAY

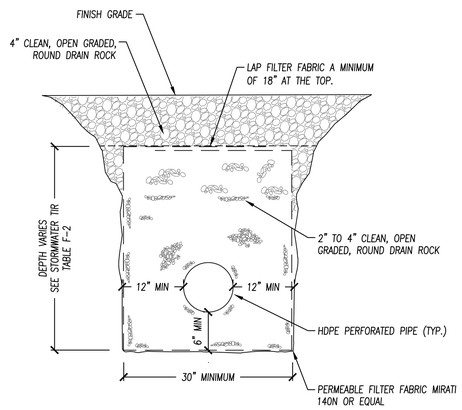

PRIVATE INFILTRATION TRENCH FOR LOT DRAINAGE

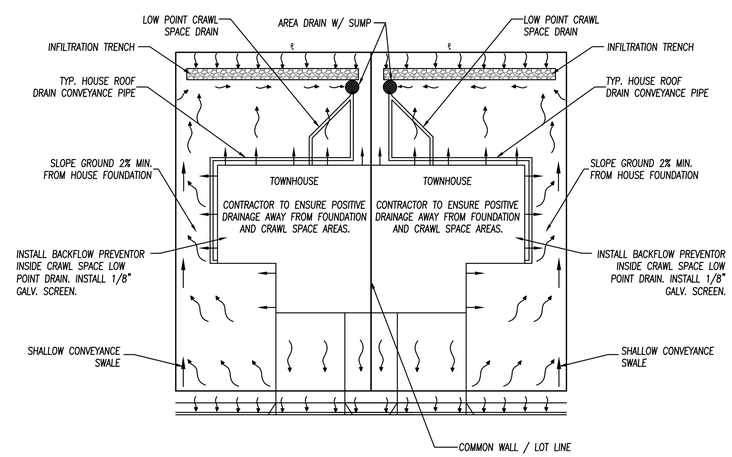

TYPICAL LOT DRAINAGE PLAN

HARB ENGINEERING
LAND DEVELOPMENT PLANNING ENGINEERING
CONSTRUCTION MANAGEMENT
701 COLUMBIA STREET, SUITE 111 VANCOUVER, WA 98660
PHONE: (360) 695-6520 WWW.HARBENGINEERING.COM
HARB ENGINEERING, INC

EXPIRES JANUARY 1, 2016

MARBELLA

SHEET NAME:

PRELIMINARY STORMWATER PLAN

DRAWN BY: B.S.G.

DESIGNED BY: B.S.G.

CHECKED BY: G.G.H.

SHEET #

PRLMN-06

HARB ENGINEERING

LAND DEVELOPMENT PLANNING ENGINEERING
CONSTRUCTION MANAGEMENT

701 COLUMBIA STREET, SUITE 111 VANCOUVER, WA 98660
PHONE: (360) 695-6520 WWW.HARBENGINEERING.COM

HARB ENGINEERING, INC

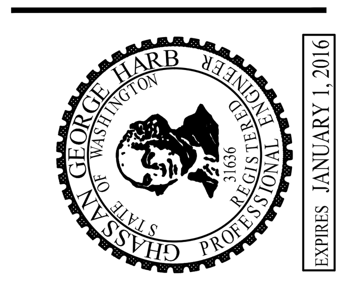

MARBELLA

SHEET NAME:
PRELIMINARY STORMWATER DETAILS

DRAWN BY: B.S.G.
DESIGNED BY: B.S.G.
CHECKED BY: G.G.H.

SHEET #
PRLMN-07

STORMFILTER CATCHBASIN DESIGN NOTES

STORMFILTER TREATMENT CAPACITY IS A FUNCTION OF THE CARTRIDGE SELECTION AND THE NUMBER OF CARTRIDGES. 1 CARTRIDGE CATCHBASIN HAS A MAXIMUM OF ONE CARTRIDGE. SYSTEM IS SHOWN WITH A 27" CARTRIDGE, AND IS ALSO AVAILABLE WITH AN 18" CARTRIDGE. STORMFILTER CATCHBASIN CONFIGURATIONS ARE AVAILABLE WITH A DRY INLET BAY FOR VECTOR CONTROL.
PEAK HYDRAULIC CAPACITY PER TABLE BELOW. IF THE SITE CONDITIONS EXCEED PEAK HYDRAULIC CAPACITY, AN UPSTREAM BYPASS STRUCTURE IS REQUIRED.

CARTRIDGE SELECTION

CARTRIDGE HEIGHT	27"		18"		18" DEEP	
MINIMUM HYDRAULIC DROP (H)	3.05'		2.3'		3.3'	
SPECIFIC FLOW RATE (gpm/sf)	2 gpm/ft²	1 gpm/ft²	2 gpm/ft²	1 gpm/ft²	2 gpm/ft²	1 gpm/ft²
CARTRIDGE FLOW RATE (gpm)	22.5	11.25	15	7.5	15	7.5
PEAK HYDRAULIC CAPACITY	1.0		1.0		1.8	
INLET PERMANENT POOL LEVEL (A)	1'-0"		1'-0"		2'-0"	
OVERALL STRUCTURE HEIGHT (B)	4'-9"		3'-9"		4'-9"	

GENERAL NOTES
1. CONTECH TO PROVIDE ALL MATERIALS UNLESS NOTED OTHERWISE.
2. FOR SITE SPECIFIC DRAWINGS WITH DETAILED STORMFILTER CATCHBASIN STRUCTURE DIMENSIONS AND WEIGHTS, PLEASE CONTACT YOUR CONTECH ENGINEERED SOLUTIONS LLC REPRESENTATIVE. www.ContechES.com
3. STORMFILTER CATCHBASIN WATER QUALITY STRUCTURE SHALL BE IN ACCORDANCE WITH ALL DESIGN DATA AND INFORMATION CONTAINED IN THIS DRAWING.
4. INLET SHOULD NOT BE LOWER THAN OUTLET. INLET (IF APPLICABLE) AND OUTLET PIPING TO BE SPECIFIED BY ENGINEER AND PROVIDED BY CONTRACTOR.
5. STORMFILTER CATCHBASIN EQUIPPED WITH 4 INCH (APPROXIMATE) LONG STUBS FOR INLET (IF APPLICABLE) AND OUTLET PIPING. STANDARD OUTLET STUB IS 8 INCHES IN DIAMETER. MAXIMUM OUTLET STUB IS 15 INCHES IN DIAMETER. CONNECTION TO COLLECTION PIPING CAN BE MADE USING FLEXIBLE COUPLING BY CONTRACTOR.
6. STEEL STRUCTURE TO BE MANUFACTURED OF 1/4 INCH STEEL PLATE. CASTINGS SHALL MEET AASHTO M306 LOAD RATING. TO MEET HS20 LOAD RATING ON STRUCTURE, A CONCRETE COLLAR IS REQUIRED. WHEN REQUIRED, CONCRETE COLLAR WITH QUANTITY (2) #4 REINFORCING BARS TO BE PROVIDED BY CONTRACTOR.
7. FILTER CARTRIDGES SHALL BE MEDIA-FILLED, PASSIVE, SIPHON ACTUATED, RADIAL FLOW, AND SELF CLEANING. RADIAL MEDIA DEPTH SHALL BE 7-INCHES. FILTER MEDIA CONTACT TIME SHALL BE AT LEAST 37 SECONDS.
8. SPECIFIC FLOW RATE IS EQUAL TO THE FILTER TREATMENT CAPACITY (gpm) DIVIDED BY THE FILTER CONTACT SURFACE AREA (sq ft).

INSTALLATION NOTES
A. ANY SUB-BASE, BACKFILL DEPTH, AND/OR ANTI-FLOTATION PROVISIONS ARE SITE-SPECIFIC DESIGN CONSIDERATIONS AND SHALL BE SPECIFIED BY ENGINEER OF RECORD.
B. CONTRACTOR TO PROVIDE EQUIPMENT WITH SUFFICIENT LIFTING AND REACH CAPACITY TO LIFT AND SET THE CATCHBASIN (LIFTING CLUTCHES PROVIDED).
C. CONTRACTOR TO TAKE APPROPRIATE MEASURES TO PROTECT CARTRIDGES FROM CONSTRUCTION-RELATED EROSION RUNOFF.

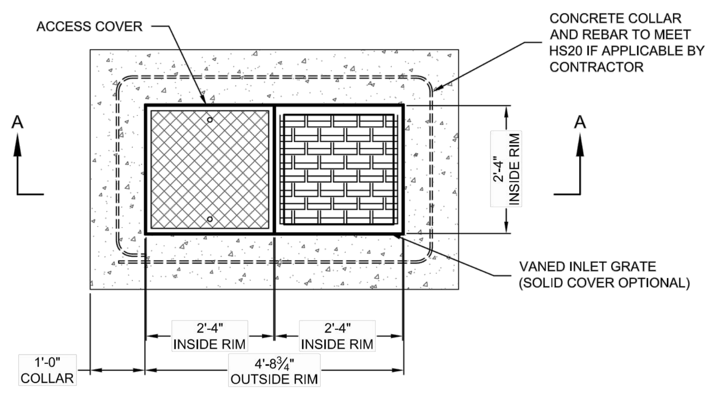

PLAN VIEW

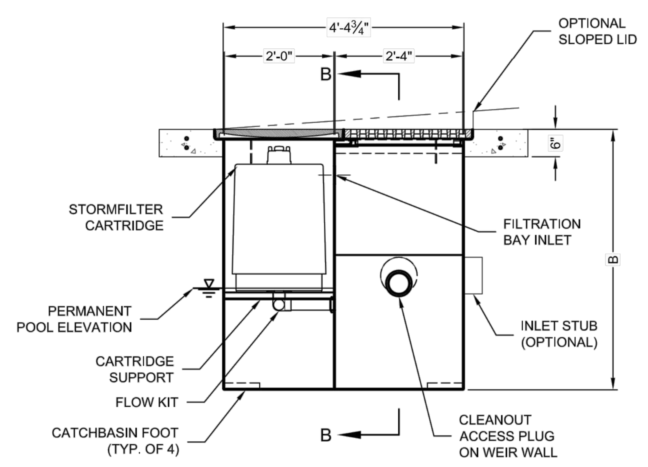

SECTION A-A

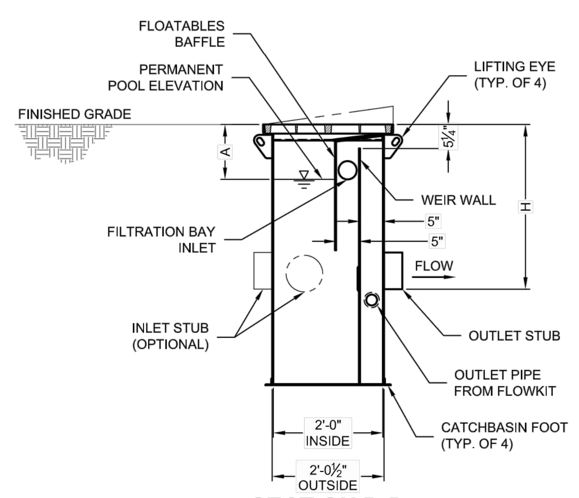

SECTION B-B

1-CARTRIDGE CATCHBASIN STORMFILTER DATA		
STRUCTURE ID		XXX
WATER QUALITY FLOW RATE (cfs)		X.XX
PEAK FLOW RATE (<1 cfs)		X.XX
RETURN PERIOD OF PEAK FLOW (yrs)		XXX
CARTRIDGE FLOW RATE (gpm)		XX
MEDIA TYPE (CSF, PERLITE, ZPG, GAC, PHS)		XXXXX
RIM ELEVATION		XXX.XX'
PIPE DATA:	I.E.	DIAMETER
INLET STUB	XXX.XX'	XX"
OUTLET STUB	XXX.XX'	XX"
CONFIGURATION: OUTLET / INLET / INLET — OUTLET / INLET / INLET		
SLOPED LID		YES\NO
SOLID COVER		YES\NO
NOTES/SPECIAL REQUIREMENTS:		

The Stormwater Management StormFilter®

CONTECH® ENGINEERED SOLUTIONS LLC
www.ContechES.com
9025 Centre Pointe Dr., Suite 400, West Chester, OH 45069
800-338-1122 513-645-7000 513-645-7993 FAX

1 CARTRIDGE CATCHBASIN STORMFILTER STANDARD DETAIL

I:\STORMWATER\COMMOPS\10 STORMFILTER\40 STANDARD DRAWINGS\CATCH BASIN SF\SFCB-SI\DWG\SFCB1-DTL.DWG 10/21/2014 8:39 AM

STORMFILTER CATCHBASIN DESIGN NOTES

STORMFILTER TREATMENT CAPACITY IS A FUNCTION OF THE CARTRIDGE SELECTION AND THE NUMBER OF CARTRIDGES. 2 CARTRIDGE CATCHBASIN HAS A MAXIMUM OF TWO CARTRIDGES. SYSTEM IS SHOWN WITH A 27" CARTRIDGE, AND IS ALSO AVAILABLE WITH AN 18" CARTRIDGE. STORMFILTER CATCHBASIN CONFIGURATIONS ARE AVAILABLE WITH A DRY INLET BAY FOR VECTOR CONTROL.
PEAK HYDRAULIC CAPACITY PER TABLE BELOW. IF THE SITE CONDITIONS EXCEED PEAK HYDRAULIC CAPACITY, AN UPSTREAM BYPASS STRUCTURE IS REQUIRED.

CARTRIDGE SELECTION

CARTRIDGE HEIGHT	27"		18"		18" DEEP	
MINIMUM HYDRAULIC DROP (H)	3.05'		2.3'		3.3'	
SPECIFIC FLOW RATE (gpm/sf)	2 gpm/ft²	1 gpm/ft²	2 gpm/ft²	1 gpm/ft²	2 gpm/ft²	1 gpm/ft²
CARTRIDGE FLOW RATE (gpm)	22.5	11.25	15	7.5	15	7.5
PEAK HYDRAULIC CAPACITY	1.0		1.0		1.8	
INLET PERMANENT POOL LEVEL (A)	1'-0"		1'-0"		2'-0"	
OVERALL STRUCTURE HEIGHT (B)	4'-9"		3'-9"		4'-9"	

GENERAL NOTES
1. CONTECH TO PROVIDE ALL MATERIALS UNLESS NOTED OTHERWISE.
2. FOR SITE SPECIFIC DRAWINGS WITH DETAILED STORMFILTER CATCHBASIN STRUCTURE DIMENSIONS AND WEIGHTS, PLEASE CONTACT YOUR CONTECH ENGINEERED SOLUTIONS LLC REPRESENTATIVE. www.ContechES.com
3. STORMFILTER CATCHBASIN WATER QUALITY STRUCTURE SHALL BE IN ACCORDANCE WITH ALL DESIGN DATA AND INFORMATION CONTAINED IN THIS DRAWING.
4. INLET SHOULD NOT BE LOWER THAN OUTLET. INLET (IF APPLICABLE) AND OUTLET PIPING TO BE SPECIFIED BY ENGINEER AND PROVIDED BY CONTRACTOR.
5. STORMFILTER CATCHBASIN EQUIPPED WITH 4 INCH (APPROXIMATE) LONG STUBS FOR INLET (IF APPLICABLE) AND OUTLET PIPING. STANDARD OUTLET STUB IS 8 INCHES IN DIAMETER. MAXIMUM OUTLET STUB IS 15 INCHES IN DIAMETER. CONNECTION TO COLLECTION PIPING CAN BE MADE USING FLEXIBLE COUPLING BY CONTRACTOR.
6. STEEL STRUCTURE TO BE MANUFACTURED OF 1/4 INCH STEEL PLATE. CASTINGS SHALL MEET AASHTO M306 LOAD RATING. TO MEET HS20 LOAD RATING ON STRUCTURE, A CONCRETE COLLAR IS REQUIRED. WHEN REQUIRED, CONCRETE COLLAR WITH QUANTITY (2) #4 REINFORCING BARS TO BE PROVIDED BY CONTRACTOR.
7. FILTER CARTRIDGES SHALL BE MEDIA-FILLED, PASSIVE, SIPHON ACTUATED, RADIAL FLOW, AND SELF CLEANING. RADIAL MEDIA DEPTH SHALL BE 7-INCHES. FILTER MEDIA CONTACT TIME SHALL BE AT LEAST 37 SECONDS.
8. SPECIFIC FLOW RATE IS EQUAL TO THE FILTER TREATMENT CAPACITY (gpm) DIVIDED BY THE FILTER CONTACT SURFACE AREA (sq ft).

INSTALLATION NOTES
A. ANY SUB-BASE, BACKFILL DEPTH, AND/OR ANTI-FLOTATION PROVISIONS ARE SITE-SPECIFIC DESIGN CONSIDERATIONS AND SHALL BE SPECIFIED BY ENGINEER OF RECORD.
B. CONTRACTOR TO PROVIDE EQUIPMENT WITH SUFFICIENT LIFTING AND REACH CAPACITY TO LIFT AND SET THE CATCHBASIN (LIFTING CLUTCHES PROVIDED).
C. CONTRACTOR TO TAKE APPROPRIATE MEASURES TO PROTECT CARTRIDGES FROM CONSTRUCTION-RELATED EROSION RUNOFF.

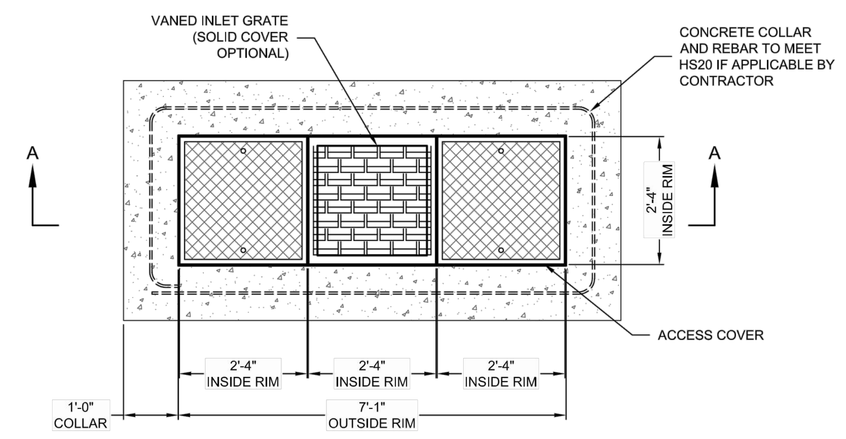

PLAN VIEW

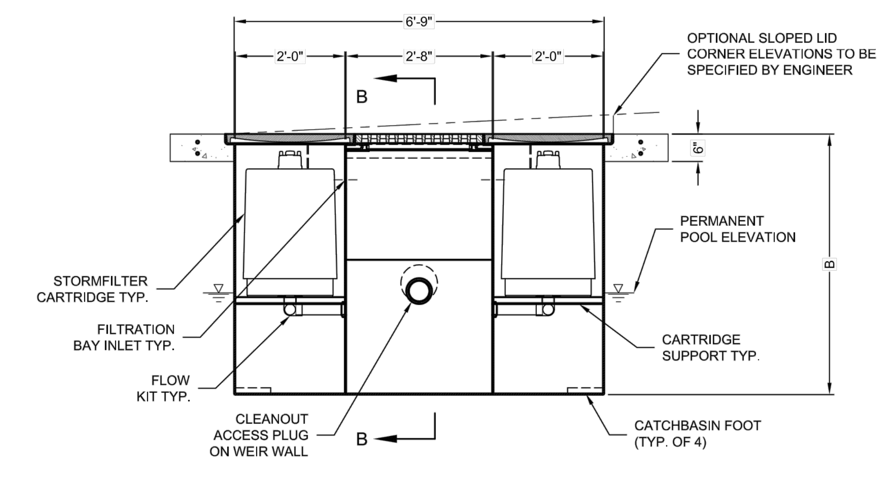

SECTION A-A

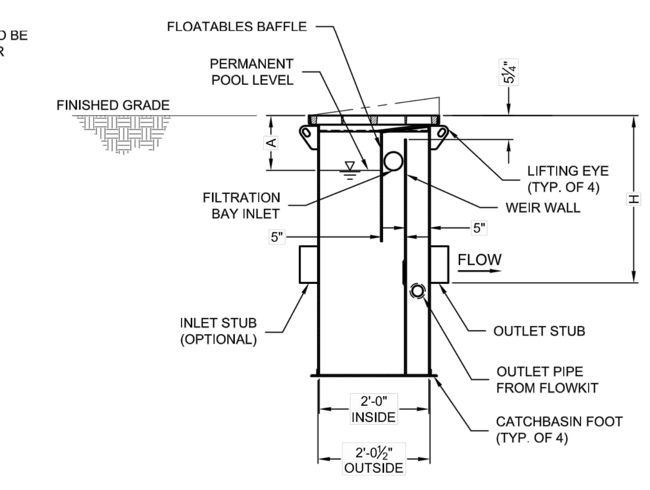

SECTION B-B

2-CARTRIDGE DEEP CATCHBASIN STORMFILTER DATA		
STRUCTURE ID		XXX
WATER QUALITY FLOW RATE (cfs)		X.XX
PEAK FLOW RATE (<1.8 cfs)		X.XX
RETURN PERIOD OF PEAK FLOW (yrs)		XXX
CARTRIDGE FLOW RATE (gpm)		XX
MEDIA TYPE (CSF, PERLITE, ZPG, GAC, PHS)		XXXXX
RIM ELEVATION		XXX.XX'
PIPE DATA:	I.E.	DIAMETER
INLET STUB	XXX.XX'	XX"
OUTLET STUB	XXX.XX'	XX"
CONFIGURATIONS: OUTLET / INLET — OUTLET / INLET / INLET — OUTLET / INLET / INLET		
SLOPED LID		YES\NO
SOLID COVER		YES\NO
NOTES/SPECIAL REQUIREMENTS:		

The Stormwater Management StormFilter®

CONTECH® ENGINEERED SOLUTIONS LLC
www.ContechES.com
9025 Centre Pointe Dr., Suite 400, West Chester, OH 45069
800-338-1122 513-645-7000 513-645-7993 FAX

2 CARTRIDGE CATCHBASIN STORMFILTER STANDARD DETAIL

I:\STORMWATER\COMMOPS\10 STORMFILTER\40 STANDARD DRAWINGS\CATCH BASIN SF\SFCB-SI\DWG\SFCB2-DTL.DWG 10/21/2014 8:42 AM

STORMFILTER CATCHBASIN DESIGN NOTES

STORMFILTER TREATMENT CAPACITY IS A FUNCTION OF THE CARTRIDGE SELECTION AND THE NUMBER OF CARTRIDGES. 3 CARTRIDGE CATCHBASIN HAS A MAXIMUM OF THREE CARTRIDGES. SYSTEM IS SHOWN WITH A 27" CARTRIDGE, AND IS ALSO AVAILABLE WITH AN 18" CARTRIDGE. STORMFILTER CATCHBASIN CONFIGURATIONS ARE AVAILABLE WITH A DRY INLET BAY FOR VECTOR CONTROL.
PEAK HYDRAULIC CAPACITY PER TABLE BELOW. IF THE SITE CONDITIONS EXCEED PEAK HYDRAULIC CAPACITY, AN UPSTREAM BYPASS STRUCTURE IS REQUIRED.

CARTRIDGE SELECTION

CARTRIDGE HEIGHT	27"		18"		18" DEEP	
MINIMUM HYDRAULIC DROP (H)	3.05'		2.3'		3.3'	
SPECIFIC FLOW RATE (gpm/sf)	2 gpm/ft²	1 gpm/ft²	2 gpm/ft²	1 gpm/ft²	2 gpm/ft²	1 gpm/ft²
CARTRIDGE FLOW RATE (gpm)	22.5	11.25	15	7.5	15	7.5
PEAK HYDRAULIC CAPACITY	1.0		1.0		1.8	
INLET PERMANENT POOL LEVEL (A)	1'-0"		1'-0"		2'-0"	
OVERALL STRUCTURE HEIGHT (B)	4'-9"		3'-9"		4'-9"	

GENERAL NOTES
1. CONTECH TO PROVIDE ALL MATERIALS UNLESS NOTED OTHERWISE.
2. FOR SITE SPECIFIC DRAWINGS WITH DETAILED STORMFILTER CATCHBASIN STRUCTURE DIMENSIONS AND WEIGHTS, PLEASE CONTACT YOUR CONTECH ANGINEERED SOLUTIONS LLC REPRESENTATIVE. www.ContechES.com
3. STORMFILTER CATCHBASIN WATER QUALITY STRUCTURE SHALL BE IN ACCORDANCE WITH ALL DESIGN DATA AND INFORMATION CONTAINED IN THIS DRAWING.
4. INLET SHOULD NOT BE LOWER THAN OUTLET. INLET (IF APPLICABLE) AND OUTLET PIPING TO BE SPECIFIED BY ENGINEER AND PROVIDED BY CONTRACTOR.
5. STORMFILTER CATCHBASIN EQUIPPED WITH 4 INCH (APPROXIMATE) LONG STUBS FOR INLET (IF APPLICABLE) AND OUTLET PIPING. STANDARD OUTLET STUB IS 8 INCHES IN DIAMETER. MAXIMUM OUTLET STUB IS 15 INCHES IN DIAMETER. CONNECTION TO COLLECTION PIPING CAN BE MADE USING FLEXIBLE COUPLING BY CONTRACTOR.
6. STEEL STRUCTURE TO BE MANUFACTURED OF 1/4 INCH STEEL PLATE. CASTINGS SHALL MEET AASHTO M306 LOAD RATING. TO MEET HS20 LOAD RATING ON STRUCTURE, A CONCRETE COLLAR IS REQUIRED. WHEN REQUIRED, CONCRETE COLLAR WITH QUANTITY (2) #4 REINFORCING BARS TO BE PROVIDED BY CONTRACTOR.
7. FILTER CARTRIDGES SHALL BE MEDIA-FILLED, PASSIVE, SIPHON ACTUATED, RADIAL FLOW, AND SELF CLEANING. RADIAL MEDIA DEPTH SHALL BE 7-INCHES. FILTER MEDIA CONTACT TIME SHALL BE AT LEAST 37 SECONDS.
8. SPECIFIC FLOW RATE IS EQUAL TO THE FILTER TREATMENT CAPACITY (gpm) DIVIDED BY THE FILTER CONTACT SURFACE AREA (sq ft).

INSTALLATION NOTES
A. ANY SUB-BASE, BACKFILL DEPTH, AND/OR ANTI-FLOTATION PROVISIONS ARE SITE-SPECIFIC DESIGN CONSIDERATIONS AND SHALL BE SPECIFIED BY ENGINEER OF RECORD.
B. CONTRACTOR TO PROVIDE EQUIPMENT WITH SUFFICIENT LIFTING AND REACH CAPACITY TO LIFT AND SET THE CATCHBASIN (LIFTING CLUTCHES PROVIDED).
C. CONTRACTOR TO TAKE APPROPRIATE MEASURES TO PROTECT CARTRIDGES FROM CONSTRUCTION-RELATED EROSION RUNOFF.

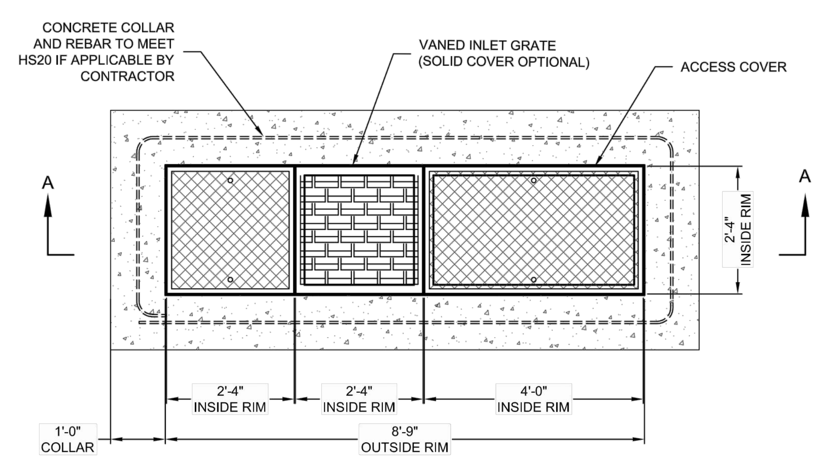

PLAN VIEW

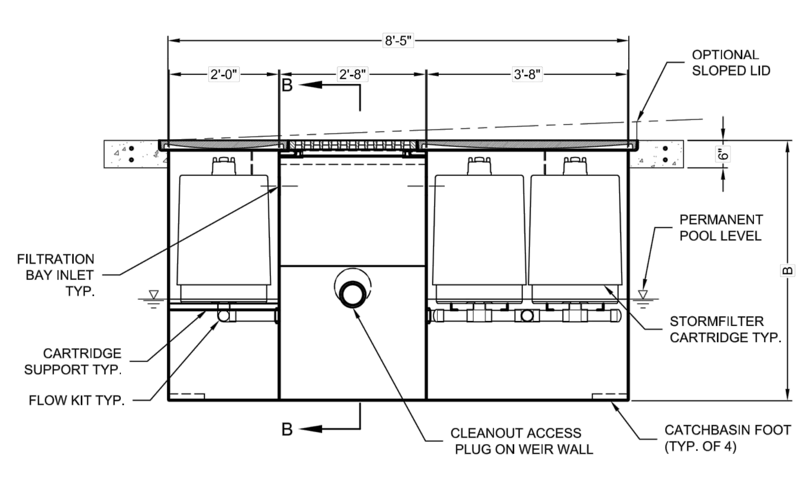

SECTION A-A

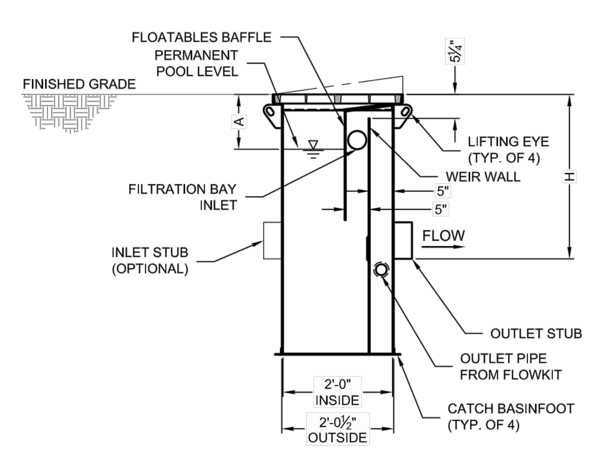

SECTION B-B

3-CARTRIDGE CATCHBASIN STORMFILTER DATA		
STRUCTURE ID		XXX
WATER QUALITY FLOW RATE (cfs)		X.XX
PEAK FLOW RATE (<1 cfs)		X.XX
RETURN PERIOD OF PEAK FLOW (yrs)		XXX
CARTRIDGE FLOW RATE (gpm)		XX
MEDIA TYPE (CSF, PERLITE, ZPG, GAC, PHS)		XXXXX
RIM ELEVATION		XXX.XX'
PIPE DATA:	I.E.	DIAMETER
INLET STUB	XXX.XX'	XX"
OUTLET STUB	XXX.XX'	XX"
CONFIGURATION: OUTLET / INLET — OUTLET / INLET		
SLOPED LID		YES\NO
SOLID COVER		YES\NO
NOTES/SPECIAL REQUIREMENTS:		

The Stormwater Management StormFilter®

CONTECH® ENGINEERED SOLUTIONS LLC
www.ContechES.com
9025 Centre Pointe Dr., Suite 400, West Chester, OH 45069
800-338-1122 513-645-7000 513-645-7993 FAX

3 CARTRIDGE CATCHBASIN STORMFILTER STANDARD DETAIL

I:\STORMWATER\COMMOPS\10 STORMFILTER\40 STANDARD DRAWINGS\CATCH BASIN SF\SFCB-SI\DWG\SFCB3-DTL.DWG 10/21/2014 8:43 AM

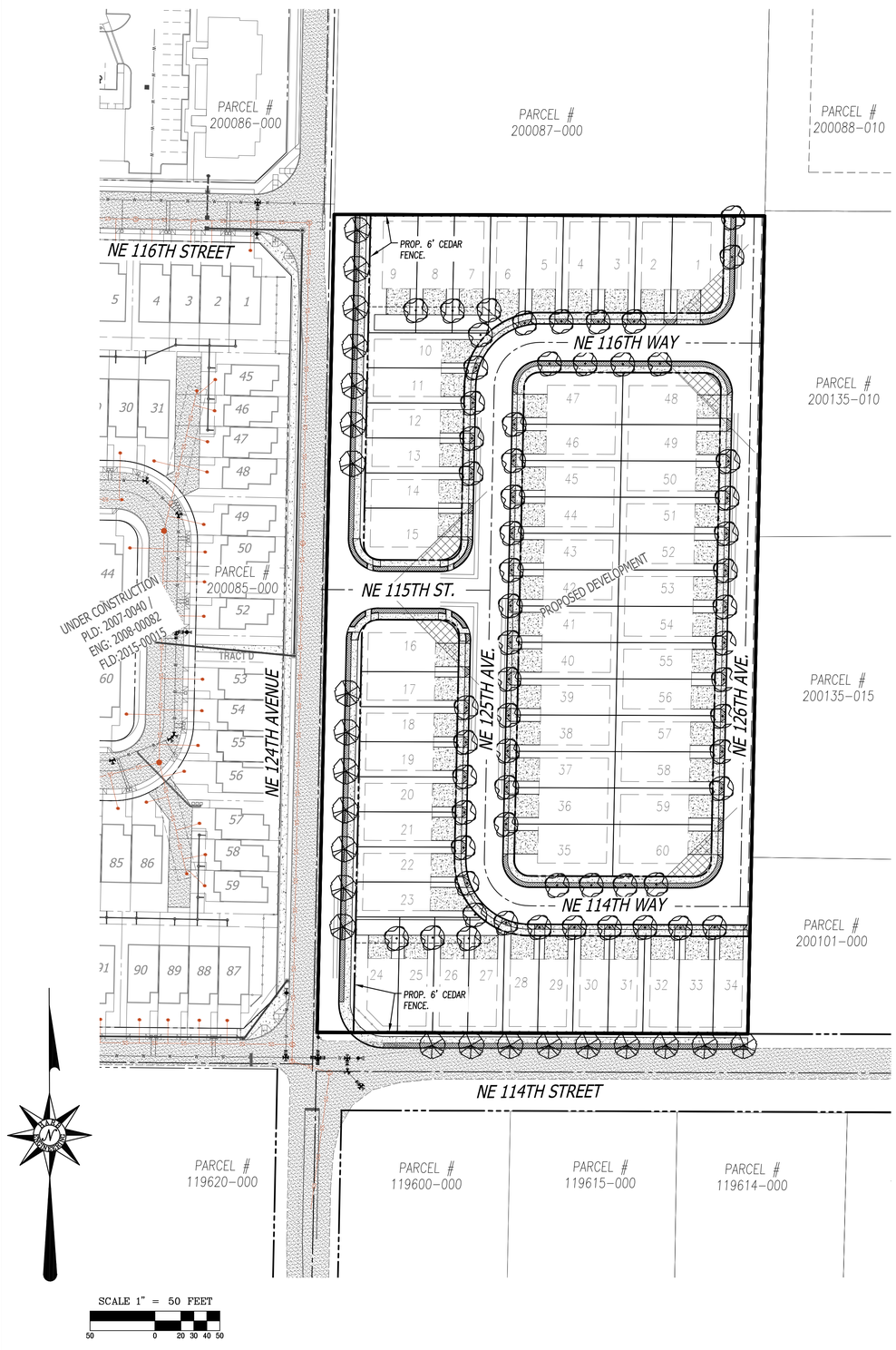

STREET TREE LEGEND

SYMBOL	QTIES.	BOTANICAL NAME	COMMON NAME	SIZE	SPACING
	14	BETULA JACQUEMONTII	JACQUEMONTII BIRCH	2" CAL.	30' O.C.
	61	PRUNUS SARGENTII 'COLUMNARIS'	COLUMNAR SARGENT CHERRY	2" CAL.	AS SHOWN

GROUND COVER LEGEND

	RUBUS PENTALOBUS 'EMERALD CARPET'	EMERALD CREEPER	1 GAL.	3' O.C.

NOTES:

1. ALL STREET TREES TO CONFORM TO CLARK COUNTY DESIGN STANDARDS AND TO THE AMERICAN NURSERY STANDARDS ANSI Z60.1. PLANT IN ACCORDANCE WITH STANDARDS ADOPTED BY THE WASHINGTON ASSOCIATION OF LANDSCAPE PROFESSIONALS (WALP).
2. PROVIDE ROOT BARRIERS 18" DEEP X 6' LONG. CENTER ON EACH TREE TRUNK ALONG SIDEWALK AND CURB.
3. TREES TO BE PLANTED SHALL MEET THE REQUIREMENTS OF THE AMERICAN ASSOCIATION OF NURSERYMEN (AAN) STANDARDS FOR NURSERY STOCK (ANSI Z60.2) FOR GRADE NO. 1 OR BETTER.
4. PLANT SPECIES, SIZES, LOCATIONS, QUANTITIES, ETC. ARE PRELIMINARY AND MAY BE SUBSTITUTED OR REVISED BY A LANDSCAPE ARCHITECT PRIOR TO FINAL SUBMITTAL DUE TO SITE CONDITIONS, AVAILABILITY, COST, ETC. WHERE ALLOWED BY CLARK COUNTY DESIGN STANDARDS.
5. LANDSCAPING REQUIRED BY CLARK COUNTY INCLUDE FRONTAGE PLANTINGS ON 124TH AVE, L1 BUFFERS ON NORTH, EAST AND WEST BOUNDARIES, AND L2 BUFFER ON THE SOUTH BOUNDARY.

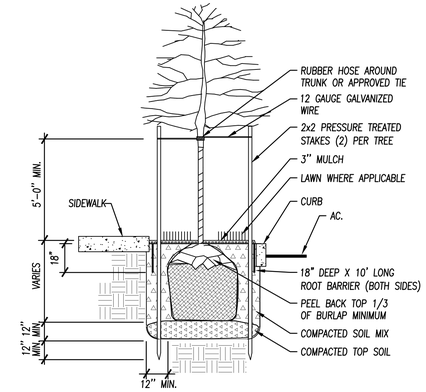

TYPICAL STREET TREE PLANTING DETAIL

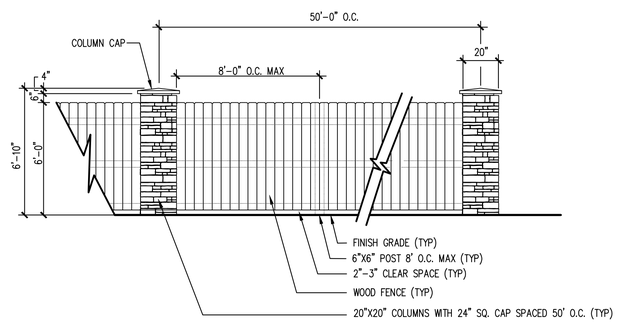

FRONTAGE PERIMETER FENCING ELEVATION DETAIL

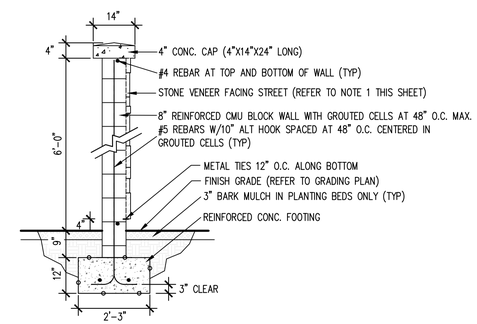

SIGN WALL SECTION DETAIL

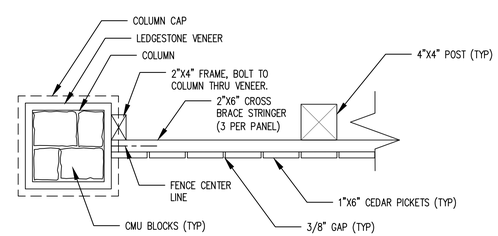

FRONTAGE PERIMETER FENCING ENLARGEMENT DETAIL

HARB ENGINEERING
LAND DEVELOPMENT CONSTRUCTION PLANNING MANAGEMENT ENGINEERING
701 COLUMBIA STREET, SUITE 111 VANCOUVER, WA 98660
PHONE: (360) 695-6520 WWW.HARBENGINEERING.COM
HARB ENGINEERING, INC
GEORGE G. HARB REGISTERED PROFESSIONAL ENGINEER STATE OF WASHINGTON
EXPIRES JANUARY 1, 2016

MARBELLA

SHEET NAME:
PRELIMINARY LANDSCAPE PLAN

DRAWN BY: B.S.G.
DESIGNED BY: B.S.G.
CHECKED BY: G.G.H.

SHEET #
PRLMN-08